2S Lithium Battery Shoulder and Neck Massager

HT32F65432A

Characteristics

- 1-shunt FOC Hall control solution
- Integrated LDO, 36V P/N gate-driver
- PID speed control:
  2 speeds (1200RPM / 1750RPM)
  2 modes (constant speed / variable speed)
- Under-/over-voltage, locked-rotor restart, over-current protection

Block Diagram

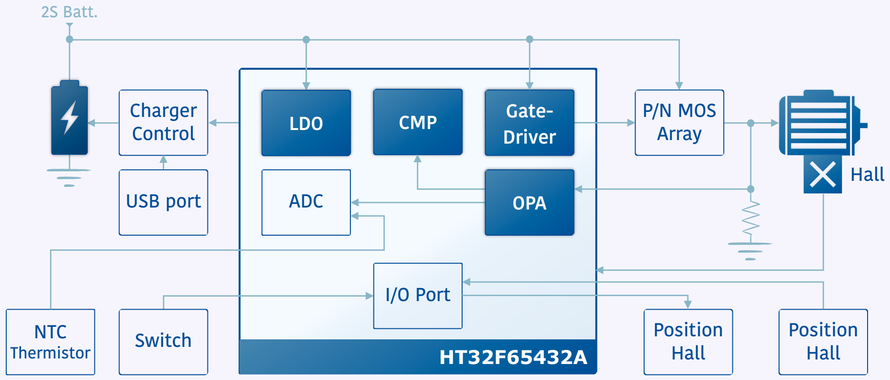

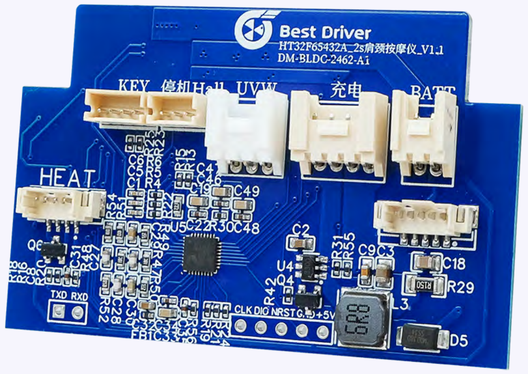

Applications

Shoulder and neck massagers, etc.